MODULE-IV
PRODUCTION COST ESTIMATION

MODULE 4
ESTIMATION AND COSTING

COST ESTIMATION IN FOUNDRY SHOP:

Foundry is a metal casting process in which the metal is melted and poured into the moulds to get the components in desired shape and size. Castings are obtained from a foundry shop.
Generally a foundry shop has the following sections :

1. Pattern Making Section

- In this section the patterns for making the moulds are manufactured.
- The machines involved in making the patterns are very costly and small foundries
  may not be able to afford these machines
- Insuch cases the pattern are got made for outside parties who are specialists in pattern making. Patterns are made either from wood or from a metal.

2. Sand-mixing Section

In this section raw sand is washed to remove clay etc., and various ingredients are added in the sand for making the cores and moulds.

3. Core-making Section

Cores are made in this section and used in moulds to provide holes or cavities in the castings.

4.Mould Making Section

This is the section where moulds are made with the help of patterns. The moulds may be made manually or with moulding machines

5. Melting Section

Metal is melted in the furnace and desired composition of metal is attained by adding various constituents. Metal may be melted in a cupola or in an induction or in an arc furnace. In some cases pit furnace is also used for melting the metals.

6. Fettling Section

The molten metal after pouring in the moulds is allowed to cool and the casting is then taken out of mould. The casting is then cleaned to remove sand and extra material and is shot blasted in fettling section. In fettling operation risers, runners and gates are cut off and removed.

7. Inspection Section

The castings are inspected in the inspection section before being sent out of the factory.

ESTIMATION OF COST OF CASTINGS

The total cost of manufacturing a component consists of following elements :

1. Material cost.
2. Labour cost.
3. Direct other expenses.
4. Overhead expenses

5. Material Cost

(a) Cost of material required for casting is calculated as follows :

(i) From the component drawing, calculate the volume of material required for casting. This volume multiplied by density of material gives the net weight of the casting.

(ii) Add the weight of process scrap *i.e.* weight of runners, gates and risers and other material consumed as a part of process in getting the casting.

(iii) Add the allowance for metal loss in oxidation in furnace, in cutting the gates and runners and over runs etc.

(iv) Multiply the total weight by cost per unit weight of the material used.

(v) Subtract the value of scarp return from the amount obtained in step (*iv*), to get the direct material cost.

(b) In addition to the direct material, various other materials are used in the process of manufacture of a casting. Some of the materials are :

(i) Materials required in melting the metal, i.e., coal, limestone and other fluxes etc. The cost of these materials is calculated by tabulating the value of material used on per tonne basis and then apportioned on each item.

(ii) Material used in core shop for making the cores, i.e., oils, binders and refractories etc. The cost of core materials is calculated depending upon the core size and method of making the core. Similarly the cost of moulding sand ingredients is also calculated. The expenditure made on these materials is generally expressed as per kg of casting weight and is covered under overhead costs.

2. Labour Cost

Labour is involved at various stages in a foundry shop. Broadly it is divided into two categories :

(i) The cost of labour involved in making the cores, baking of cores and moulds is based on the time taken for making various moulds and cores.

(ii) The cost of labour involved in firing the furnace, melting and pouring of the metal. Cleaning of castings, fettling, painting of castings etc., is generally calculated on the basis of per kg of cast weight.

3. Direct Other Expenses

Direct expenses include the expenditure incurred on patterns, core boxes, cost of using machines and other items which can be directly identified with a particular product. The cost of patterns, core boxes etc., is distributed on per item basis.

4. Overhead Expenses

The overheads consist of the salary and wages of supervisory staff, pattern shop staff and inspection staff, administrative expenses, water and electricity charges etc. The overheads are generally expressed as percentage of labour charges.

1.Calculate the total cost of CI (Cast Iron) cap shown in Fig. 5.1, from the following data :

Cost of molten iron at cupola spout = Rs. 30 per kg

Process scrap = 17 percent of net wt. of casting

Process scrap return value = Rs. 5 per kg

Administrative overhead charges = Rs. 2 per kg of metal poured.

Density of material used = 7.2 gms/cc

The other expenditure details are :

Process	*Time per piece*	*Labour charges per hr*	*Shop overheads per hr*
Moulding and pouring	10 min	Rs. 30	Rs. 30
Casting removal, gate cutting etc.	4 min	Rs. 10	Rs. 30
Fettling and inspection	6 min	Rs. 10	Rs. 30

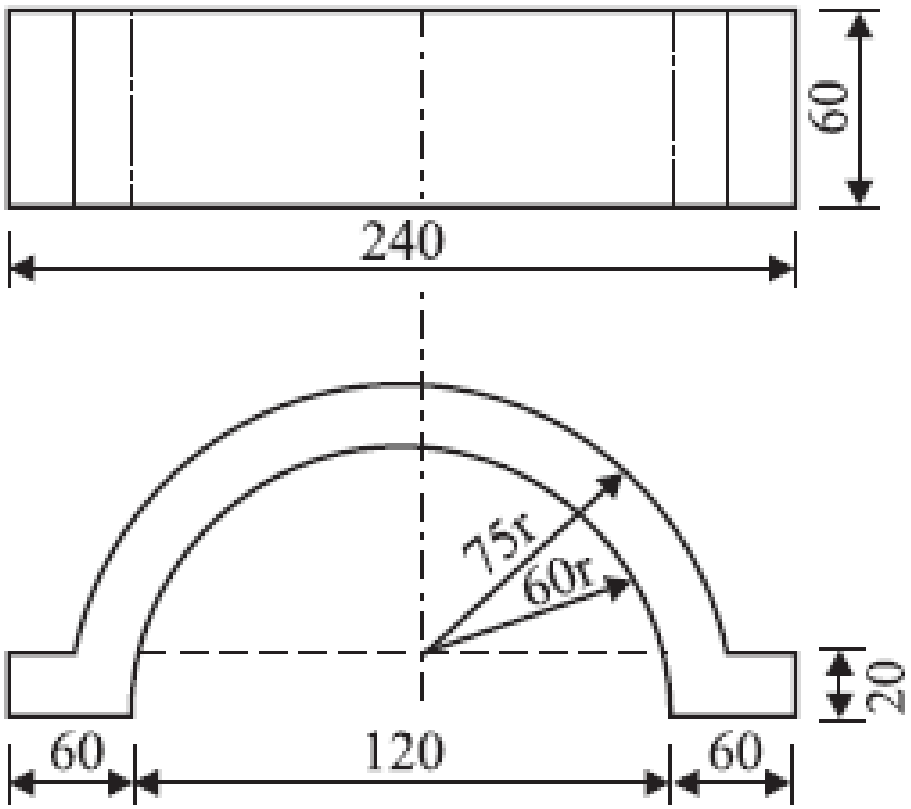

Fig. 5.1. All dimensions are in mm.

Solution:

$$\text{Volume of the component} = (2 \times 6 \times 2 \times 6) + \frac{1}{2} \times p\,[(7.5)^2 - (6)^2]\,6$$

$$= 335 \text{ cc}$$

$$\text{Net weight of the casting} = 335 \times 7.2$$

$$= 2{,}412 \text{ gms}$$

$$= 2.4 \text{ kgs}$$

$$\text{Process scrap} = 2.4 \times 0.17 = 0.4 \text{ kg}$$

$$\text{Metal required per piece} = 2.4 + 0.4 = 2.8 \text{ kgs}$$

$$\text{Material cost/piece} = 2.8 \times 30 = \text{Rs. } 84$$

$$\text{Process return} = 0.4 \times 5 = \text{Rs. } 2$$

$$\text{Net material cost per piece} = 84 - 2 = \text{Rs. } 82$$

(*ii*) Calculate Labour Cost and Overheads

Process	*Time per piece*	*Labour charges per piece (Rs.)*	*Shop overheads per piece (Rs.)*
Moulding and pouring	10 min	$\frac{10}{60} \times 30 = 5$	$\frac{30 \times 10}{60} = 5$
Casting removal, gate cutting etc.	4 min	$\frac{4}{60} \times 10 = 0.67$	$\frac{30 \times 4}{60} = 2$
Fettling and inspection	6 min	$\frac{6}{60} \times 10 = 1$	$\frac{30 \times 6}{60} = 3$
Total		**Rs. 6.67**	**Rs. 10**

$$\begin{aligned}
\text{Labour charges} &= \text{Rs. } 6.67 \text{ per piece} \\
\text{Shop overheads} &= \text{Rs. } 10 \text{ per piece} \\
\text{Administrative overheads} &= 2 \times 2.8 = \text{Rs. } 5.6 \\
\text{Total cost per piece} &= 82 + 6.67 + 10 + 5.6 \\
&= \text{Rs. } 104.27
\end{aligned}$$

2.A cast iron component is to be manufactured as per Fig. 5.2. Estimate the selling price per piece from the following data :

Density of material = 7.2 gms/cc

Cost of molten metal at cupola spout = Rs. 20 per kg

Process scrap = 20 percent of net weight

Scrap return value = Rs. 6 per kg

Administrative overheads = Rs. 30 per hour

Sales overheads = 20 percent of factory cost

Profit = 20 percent of factory cost

Other expenditures are :

Operation	*Time (min)*	*Labour cost/hr (Rs.)*	*Shop overheads/hr (Rs.)*
Moulding and pouring	15	20	60
Shot blasting	5	10	40
Fettling	6	10	40

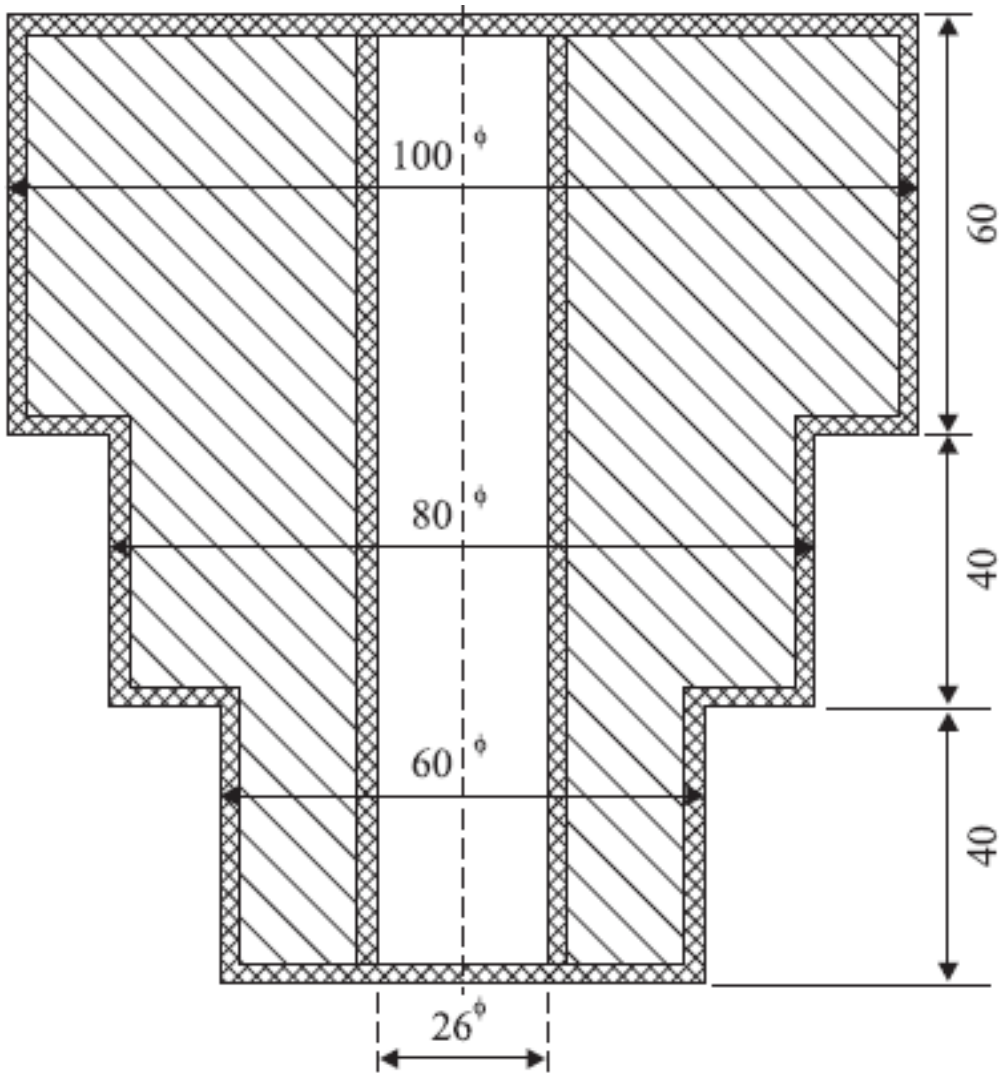

(a)

(i) *Material cost :*

$$\text{Net volume of cast component} = \frac{\pi}{4}\left(10^2 \times 6 + 8^2 \times 4 + 6^2 \times 4 - 2.6^2 \times 14\right)$$

$$= 711 \text{ cc}$$

$$\text{Net weight of cast component} = 711 \times 7.2 = 5117 \text{ gms}$$

$$= 5.117 \text{ kg}$$

$$\text{Process scrap} = 20 \text{ percent of } 5.117 \text{ kg}$$

$$= 0.2 \times 5.117 = 1.02 \text{ kg}$$

$$\text{Total metal required per component} = 5.12 + 1.02 = 6.14 \text{ kg}$$

$$\text{Cost of metal poured} = 6.14 \times 20 = \text{Rs. } 122.8$$

$$\text{Process return value} = 1.02 \times 6 = \text{Rs. } 6.12$$

$$\text{Material cost per component} = 122.8 - 6.1 = \text{Rs. } 116.7$$

(ii) *Labour cost and factory overheads :*

Labour cost = Rs. 6.83

Shop overheads = Rs. 22.33

Process	*Time per piece (Minutes)*	*Labour cost per piece (Rs.)*	*Shop overheads per piece (Rs.)*
Melting and pouring	15	5.00	15.00
Shot blast	5	0.83	3.33
Fettling	6	1.00	4.00
Total	**26 min**	**6.83**	**22.33**

(*iii*) Factory cost per component = 116.70 + 6.83 + 22.33 = Rs. 145.86

(*iv*) Administrative overheads = $\frac{30 \times 26}{60}$ = Rs. 13

(*v*) Sales overheads = 0.2 × 145.86 = Rs. 29.17

(*vi*) Profit = 0.2 × 145.86 = Rs. 29.17

Selling price per component = Factory cost + Administrative overheads + Sales overheads + profit

= 145.86 + 13 + 29.17 + 29.17

= Rs. 217.2

COST ESTIMATION IN WELDING SHOP

Gas welding :

- The most commonly used gas welding is oxy-acetylene welding. The high temperature required for welding is obtained by the application of a flame from mixture of oxygen and acetylene gas.
- The filler material is used to fill the gap between the parts to be welded.
- The welding technique used may be leftward welding or rightward welding.

Leftward welding : In this method, welding is started from right hand side of the joint and proceeds towards left. This method is used for welding plates upto 5 mm thick. No edge preparation is required in case of the plates of thickness upto 3 mm. **Rightward welding :** This method is adopted for welding thicker plates. Welding proceeds from left to right. The flame is directed towards the deposited metal and rate of cooling is very slow

TYPES OF JOINTS

Butt

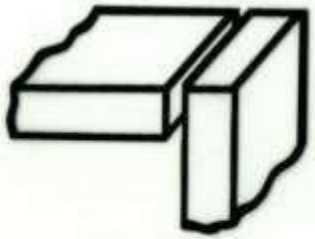

Corner

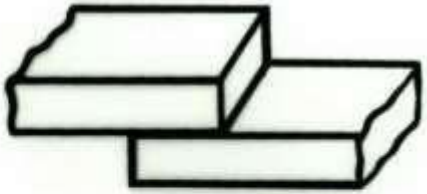

Lap

Edge

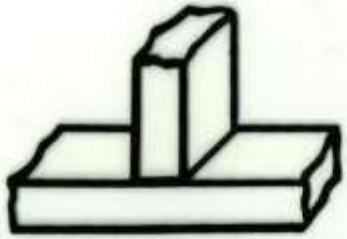

Tee

Corner Joints - Edge Preparation & Weld Types

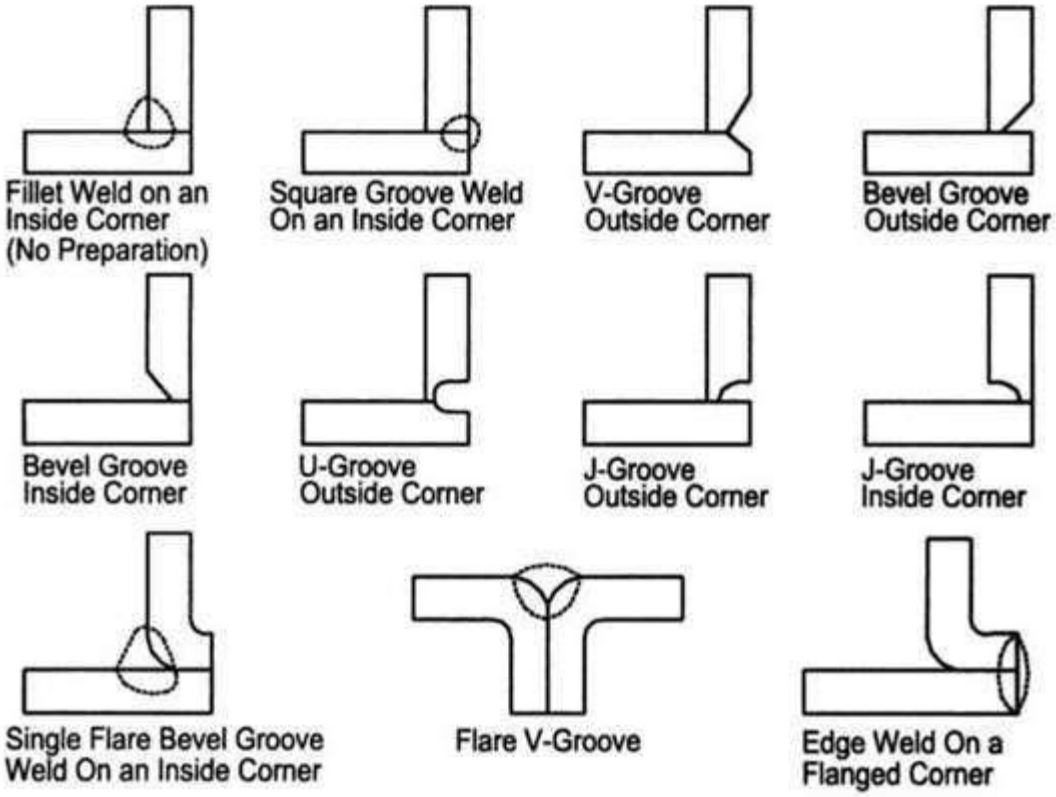

Estimation of Cost in Welding

The total cost of welding consists of the following elements :

1. Direct material cost.
2. Direct labour cost.
3. Direct other expenses.
4. Overheads.

1.Direct Material Cost

The direct material cost in a welded component consists of the following : (i)Cost of base materials to be welded *i.e.,* sheet, plate, rolled section, casting or forging. This cost is calculated separately.

(ii)Cost of electrodes/filler material used. The electrode consumption can be estimated by using the charts supplied by the suppliers. Another way to find the actual weight of weld metal deposited is to weigh the component before and after the welding and making allowance for stub end and other losses during welding.

Also the weight of weld metal = Volume of weld × Density of weld material

2.Direct Labour Cost

The direct labour cost is the cost of labour for preparation, welding and finishing
operations.

- Preparation or pre-welding labour cost is the cost associated with preparation of job for welding, *i.e.,* the edge preparation, machining the sections to be welded etc. If gas is used in cutting/preparation of edges, its cost is also taken care of.
- Cost of labour in actual welding operation is calculated considering the time in
  which arc is actually in operation.
- The cost of labour for finishing operation is the cost of labour involved in grinding, machining, sand or shot blasting, heat treatment or painting of welded joints.

3. Direct Other Expenses

The direct other expenses include the cost of power consumed, cost of fixtures used for a particular job etc.

Cost of power : The cost of power consumed in arc welding can be calculated from the following formula :

$$\text{Power cost} = \frac{V \times A}{1{,}000} \times \frac{t}{60} \times \frac{1}{E} \times \frac{1}{r} \times C$$

V = Voltage

A = Current in Amperes

t = Welding time in minutes

E = Efficiency of the welding machine

= 0.6 for welding transformer

= 0.25 for welding generator

r = Ratio of operating time to connecting time taken by the operator

C = Cost of electricity per kWh *i.e.*, Unit.

4. Overheads

The overheads include the expenses due to office and supervisory staff, lighting charges of office and plant, inspection, transport, cost of consumables and other charges. The cost of equipment is also apportioned to the individual components in the form of depreciation.

1. Leftward Welding

Thickness of plate (mm)	*Consumption of Oxygen and Acetylene (m^3/hr)*	*Diameter of filled rod used (mm)*	*Rate of welding (meters/hrs)*	*Filler rod used per meter of weld (meters)*
1.0	0.035 – 0.072	1.0	6.0 – 8.0	1.00
1.5	0.06 – 0.09	1.5	7.5 – 9.0	1.75
2.0	0.075 – 0.125	2.0	6.0 – 7.5	2.50
2.5	0.093 – 0.155	2.5	6.0 – 8.0	2.75
3.0	0.14 – 0.19	2.5	5.5 – 6.0	1.65
4.0	0.20 – 0.30	3.0	4.5 – 5.5	2.10
5.0	0.30 – 0.37	3.0	3.5 – 4.5	4.80

2. Rightward Welding

Thickness of plate (mm)	*Consumption of O_2 and C_2H_2 (m^3/hr)*	*Diameter of filler rod used (mm)*	*Rate of welding (meters/hr)*	*Filler rod used per meter of weld (meters)*
5	0.37 – 0.52	2.5	3.6 – 4.5	3.40
6	0.50 – 0.70	3.0	3.0 – 3.6	3.40
7	0.65 – 0.80	3.5	2.5 – 3.1	3.40
8	0.71 – 0.86	4.0	2.1 – 2.4	3.40
9	0.95 – 1.20	4.5	1.9 – 2.2	4.00
10	1.00 – 1.30	5.0	1.7 – 2.0	4.50
12	1.25 – 1.40	6.0	1.3 – 1.5	4.75
15	1.55 – 1.65	6.0	1.2 – 1.3	6.75
20	1.70 – 2.00	6.0	0.9 – 1.0	9.75
25	2.00 – 2.5	6.0	0.6 – 0.7	16.5

Example 6 : A container open on one side of size 0.5 m × 0.5 m × 1 m is to be fabricated from 6 mm thick plates Fig. 5.5. The plate metal weighs 8 gms/cc. If the joints are to be welded, make calculations for the cost of container. The relevant data is :

Cost of plate	=	Rs. 10 per kg
Sheet metal scarp (wastage)	=	5 percent of material
Cost of labour	=	10 percent of sheet metal cost
Cost of welding material	=	Rs. 20 per meter of weld.

Solution :

(*i*) To calculate material cost :

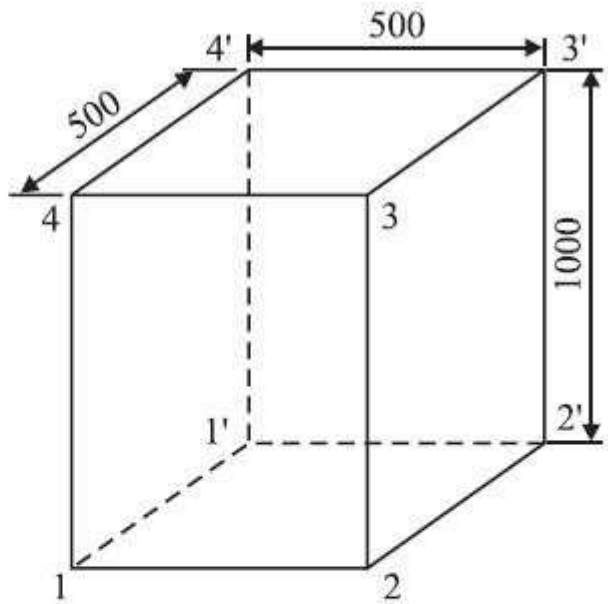

Fig. 5.5. Welded water tank

$$\text{Net volume of material used} = (4 \times 50 \times 100 \times 0.6) + (50 \times 50 \times 0.6)$$
$$= 13{,}500 \text{ cc}$$
$$\text{Net weight of container} = \text{Volume} \times \text{density of material}$$
$$= 13{,}500 \times 8$$
$$= 1{,}08{,}000 \text{ gm}$$
$$= 108 \text{ kgs}$$

$$\text{Sheet metal scrap} = 5 \text{ percent of net weight}$$

$$= \frac{108 \times 5}{100} = 5.40 \text{ kgs}$$

Total weight of sheet metal required for fabrication of one container

$$= 108 + 5.4$$

$$= 113.4 \text{ kgs}$$

$$\text{Cost of sheet metal per container} = 113.4 \times 10$$

$$= \text{Rs. } 1134$$

(*ii*) To calculate labour charges :

$$\text{Cost of labour} = 10 \text{ percent of sheet metal cost}$$

$$= \frac{1134 \times 10}{100} = \text{Rs. } 113$$

(*iii*) To calculate cost of welding material :

$$\text{Length to be welded} = (4 \times 50) + (4 \times 100)$$
$$= 600 \text{ cm} = 6 \text{ meters}$$
$$\text{Cost of welding material} = 6 \times 20$$
$$= \text{Rs. } 120$$

(*iv*)

$$\text{Cost of container} = \text{Cost of sheet metal material} + \text{Cost of labour} + \text{Cost of welding material}$$
$$= 1134 + 113 + 120$$
$$= \text{Rs. } 1367$$

Machine Shop Estimating

Introduction

For estimation purposes, machining cost is calculated after finding the material cost. Machining is done on castings, forgings and bar stocks etc., for getting the exact size and shape of the product.

Machine Shop Operations

Generally following operations are performed in the machine shop on different machines:

1. Turning.
2. Knurling.
3. Facing.
4. Drilling.
5. Boring.
6. Reaming
7. Threading.
8. Tapping.
9. Milling.
10. Grinding.
11. Shaping.
12. Planning.

In estimating, our aim is to find out the time, which an operator takes for performing the machining operation, for calculating their wages. In addition to this machining time (also known as operation time), following time considerations are taken:

(i) Setting up the job and tool or cutters.
(ii) Setting up the machine.
(iii) Inspection of job.
(iv) Fatigue allowance.
(v) Tool changing and sharpening time.
(vi) Machine cleaning and servicing time.
(vii) Personal allowance.

COST ESTIMATION IN MACHINE SHOP

Product Cost = Material + Labour + Manufacturing cost.

To know manufacturing cost i.e. Machining cost, it is necessary to compute machining time.

The total time required to perform a machining operation consists of following elements :

Set-up time,
Handling time,
Machining time,
Tear down time,
Down time and
Allowances.

- **Set-up Time:** Time required to
  - Study the component drawing.
  - Draw tools from tool crib,
  - Install and adjust the tools, jigs and fixtures on the machine.
- **Handling Time:** Time required to
  - Prepare a part for machining
  - Dispose the part after operation has been completed.
  - Load and unload the component on the machine
  - Make measurements on parts during machining, etc.
- **Machining Time:**
  - time for which the machine works on the component, i.e. time between tool touches and leaves the w/p
  - machining time depends on material, speed, feed, depth of cut and number of cuts required.

- **Tear-down Time:** Time required to
  remove the tools, jigs and fixtures from the machine
  clean the machine and tools after the operation on last part

  The tear down time occurs only once for a complete lot.

- **Down Time:** time wasted by the operator due to
  breakdowns,
  non-availability or delay in supply of tools and materials.

- **Allowances:**
  time for personal needs of the operator,
  time for checking,
  time for tool sharpening etc.

Terms used in cutting time formula

Length of cut (L): distance travelled by the tool to machine the work piece

Length of cut (L) = Approach length + Length of work piece to be machined + Over travel

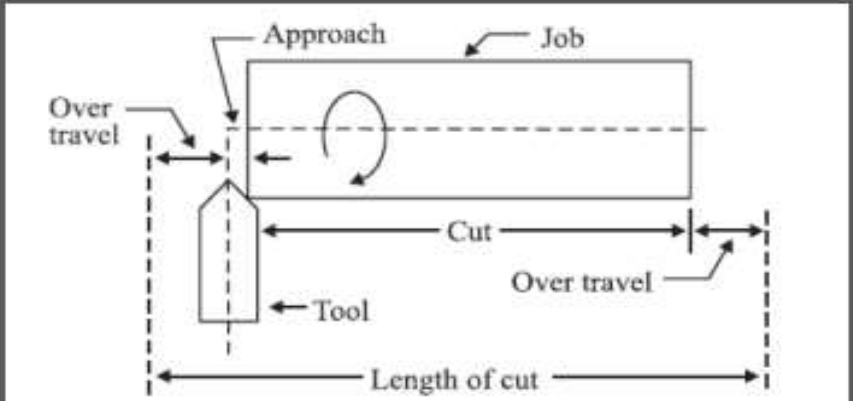

Total tool travel = length of job + approach + over travel

Terms used in cutting time formula

Feed (F): distance that a tool travels along the work w.r.t. the tool for each revolution of the work-piece.

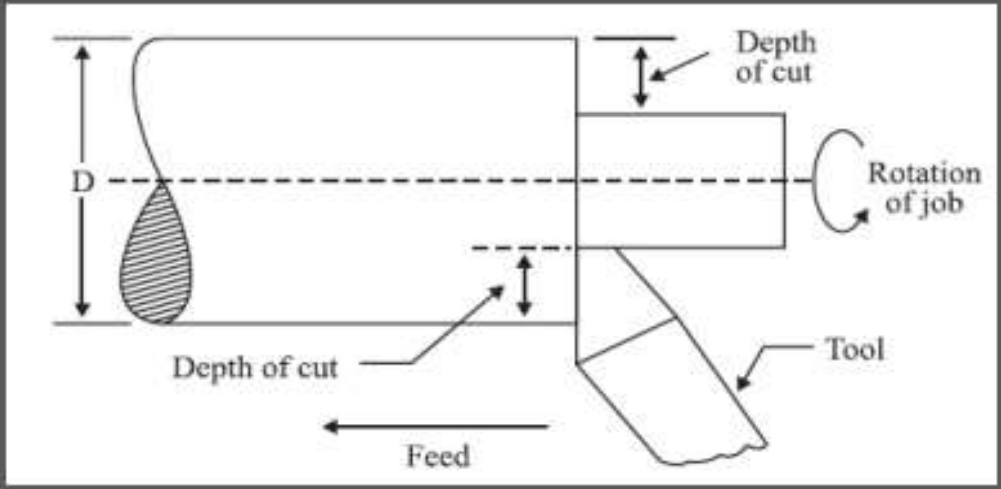

Terms used in cutting time formula

Depth of cut: difference between unfinished dimension and finished dimension of the job.

Example: in turning, depth of cut is the difference between radius of the bar before and after taking the cut.

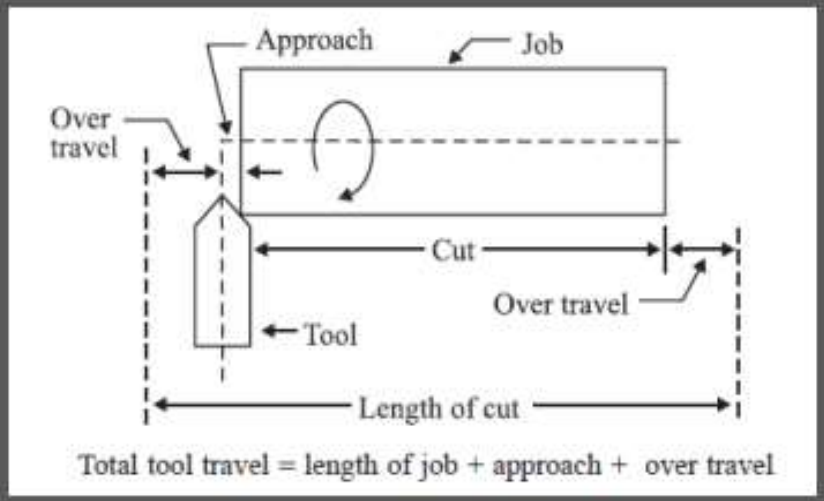

Terms used in cutting time formula

Cutting speed: speed at which the cutting edge of tool passes over the job and it is usually expressed in meters per minute.

$$S = \frac{\pi \times D \times N}{1000} \quad \text{(or)} \quad N = \frac{1000 \times S}{\pi D}$$

where S = Surface cutting speed in meters per minute
D = Diameter of the job in mm
N = r.p.m. of machine/job.

CALCULATION OF MACHINING TIME: LATHE OPERATIONS

Turning : removal of excess material form the work piece by means of a pointed tool, to produce a cylindrical or cone shaped surface.

From cutting speed, r.p.m. of job is calculated by using the formula.

$$N = \frac{1000\,S}{\pi \times D}$$

N = r.p.m. of job

S = Surface cutting speed in meters/minute

D = Diameter of the stock to be turned (in mm)

$$\text{Time required for turning (in minutes) } T = \frac{L}{f \times N}$$

f = Feed per revolution (in mm)

L = Length of stock to be turned (in mm)

CALCULATION OF MACHINING TIME: LATHE OPERATIONS

If it is not possible to obtain the required dimensions in single cut, more than one cut may be required. In such cases, the r.p.m. (N) is determined by using mean diameter of the job.

$$N = \frac{1000 \times S}{\pi \times D_{average}}$$

$$D_{average} = \frac{D + d}{2}$$

D = Dia of stock before turning

d = Dia of job after turning

Time required for turning (in minutes) $T = \frac{L}{f \times N} \times P$

f = Feed per revolution (in mm)

L = Length of stock to be turned (in mm)

P = Number of cuts (passes) required

CALCULATION OF MACHINING TIME: LATHE OPERATIONS

If over travel and approach are also to be taken into account,

$$\text{Time required for turning (in minutes) } T = \frac{A + L + O}{f \times N} \times P$$

f = Feed per revolution (in mm)
L = Length of stock to be turned (in mm)
P = Number of cuts (passes) required
A = Approach length
O = Over Travel

CALCULATION OF MACHINING TIME: LATHE OPERATIONS

1. Problem: Turning

Calculate the machining time to turn the dimensions shown in Fig. 5.22.

Starting from a m.s. bar of f 80 mm. The cutting speed with HSS tool is 60 meters per minute and feed is 0.70mm/rev., depth of cut is 2.5 mm per pass.

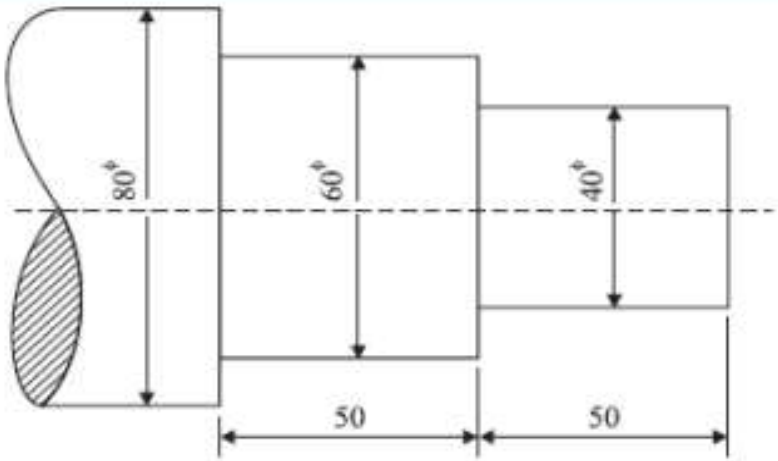

Fig. 5.22

CALCULATION OF MACHINING TIME: LATHE OPERATIONS

1. Problem: Turning

Turning will be done in 2 steps.

1st step: length of (50 + 50) = 100 mm will be reduced from 80" to 60"

2nd step: length of 50mm is to be reduced from 60" to 40".

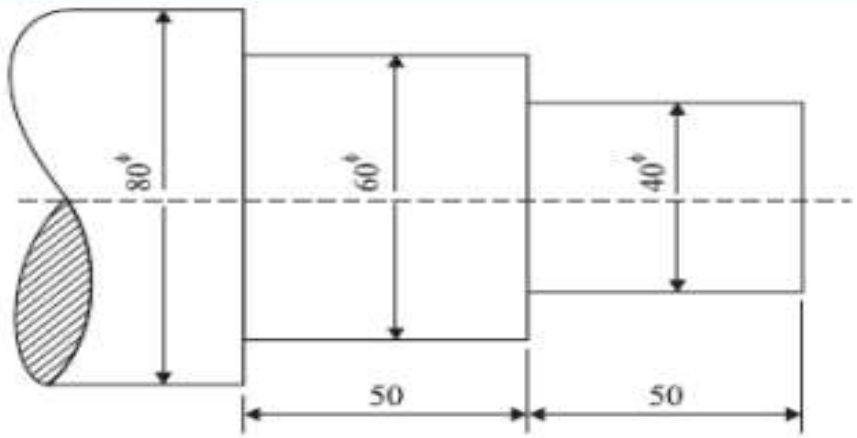

Fig. 5.22

CALCULATION OF MACHINING TIME: LATHE OPERATIONS

1. Problem: Turning

Given S = 60 m/min *f = 0.70 mm/rev.*

Step I : turning from Ø80" to Ø60" for 100 mm long.

$$N = \frac{1{,}000 \times S}{\pi \times D} = \frac{1{,}000 \times 60}{\pi \times 80} = 238.8 = 240 \text{ r.p.m.}$$

$$\text{No. of passes} = \frac{\text{Depth of material to be removed}}{\text{Depth of cut}}$$

$$= \frac{(80 - 60)}{2 \times 2.5} = 4$$

Time required = L / (f x N) X P = 100 / (0.7 × 240) × 4

= 2.38 min.`

CALCULATION OF MACHINING TIME: LATHE OPERATIONS

1. Problem: Turning

Step 2 : turning from Ø60" to Ø40" for 50 mm long.

$$N = \frac{1{,}000 \times S}{\pi \times D} = \frac{1{,}000 \times 60}{\pi \times 60} = 318 \text{ r.p.m.}$$

$$\text{No. of passes} = \frac{\text{Depth of material to be removed}}{\text{Depth of cut}}$$

$$= \frac{(60 - 40)}{2 \times 2.5} = 4$$

Time required = $L / (f \times N) \times P = 50 / (0.7 \times 318) \times 4$

$= 0.9$ min.

Total time $= 2.38 + 0.90 = 3.28$ min.